Line	Description	General applications
A	Continuous thick or Continuous wide	Visible outlines, visible edges; crests of screw threads; limits of length of full deph thread,lines of cuts and section arrows; parting lines of moulds in views; main representations in diagrams, maps, flow charts; system lines(structural metal engg.)
B	Continuous thin (narrow) (straight or curved)	Imaginary lines of intersection; grid, dimension, extension, projection, short centre, leader, reference lines; hatching; outlines of revolved sections; root of screw threads; interpretation lines of tapered features; framing of details; indication of repetitiv details;
C	Continuous thin (narrow) freehand	Limits of partial or interrupted views and sections, if the limit is not a chain thin line
D	Continuous thin (narrow) with zigzags (straight)	Long-break line
E	Dashed thick (wide)	Line showing permissible of surface treatment
F	Dashed thin (narrow)	Hidden outlines; hidden edges
G	Chain thin Long-dashed dotted (narrow)	Centre line; lines of symmetry; trajectories; pitch circle of gears, pitch circle of holes,
H THICK THIN THICK	Chain thin (narrow) with thick (wide) at the ends and at changing of position	Cutting planes
J	Chain thick or Long-dashed dotted (wide)	Indication of lines or surfaces to which a special requirement applies
K	Chain thin double-dashed or long-dashed double-dotted (narrow)	Outlines of adjacent parts Alternative and extreme positions of movable parts Centroidal lines Initial outlines prior to forming Parts situated in front of the cutting plane

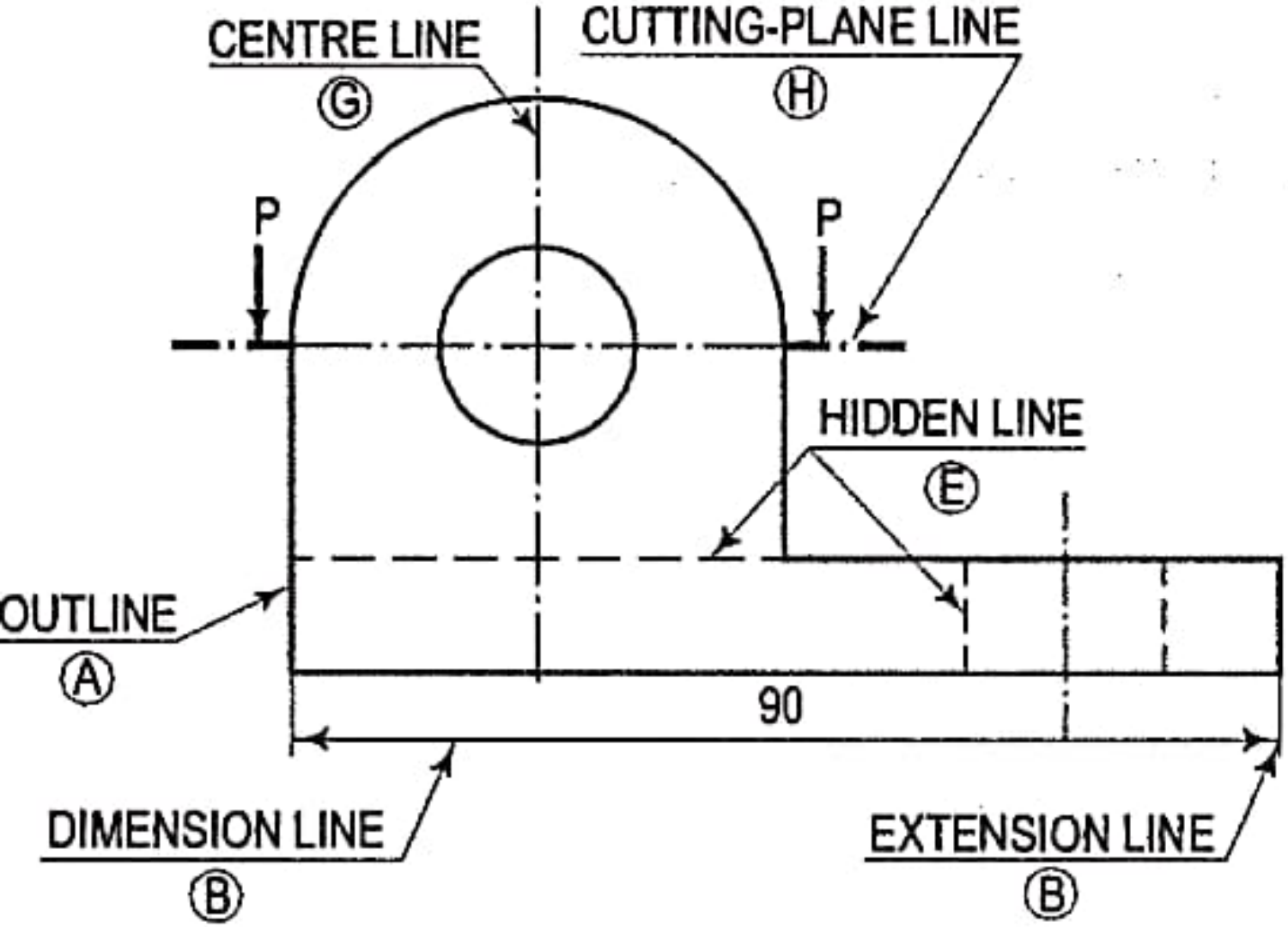
CENTRE LINE
G
CUTTING-PLANE LINE
H
P
P
HIDDEN LINE
E
OUTLINE
A
90
DIMENSION LINE
B
EXTENSION LINE
B

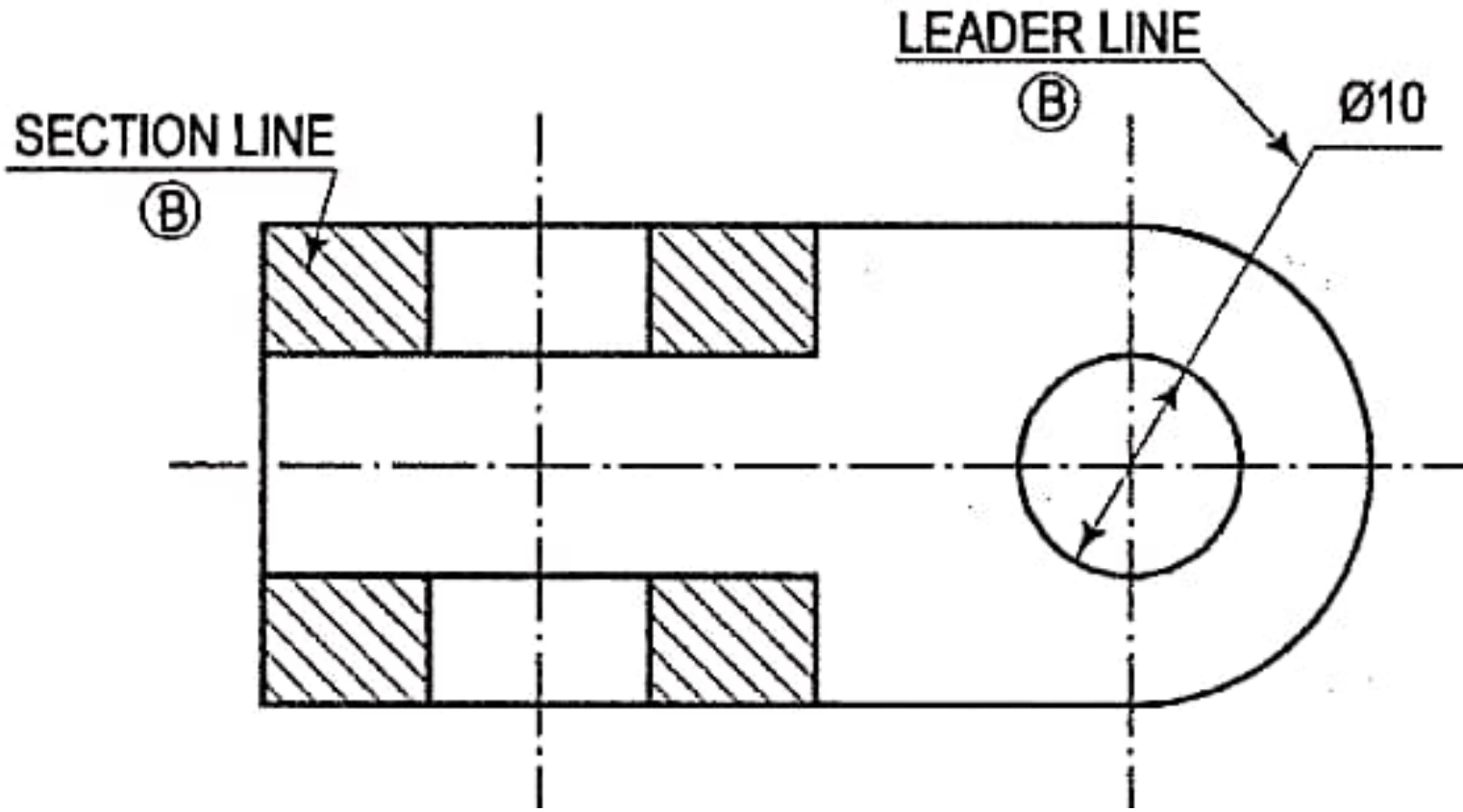
LEADER LINE
B
Ø10
SECTION LINE
B

SIZES OF DRAWING BOARDS

Designation	Size (mm)
B0	1000 × 1500
B1	700 × 1000
B2	500 × 700
B3	350 × 500

(i)	Reducing scales	1 : 2	1 : 5	1 : 10
		1 : 20	1 : 50	1 : 100
		1 : 200	1 : 500	1 : 1000
		1 : 2000	1 : 5000	1 : 10000
(ii)	Enlarging scales	50 : 1	20 : 1	10 : 1
		5 : 1	2 : 1	
(iii)	Full size scales			1 : 1

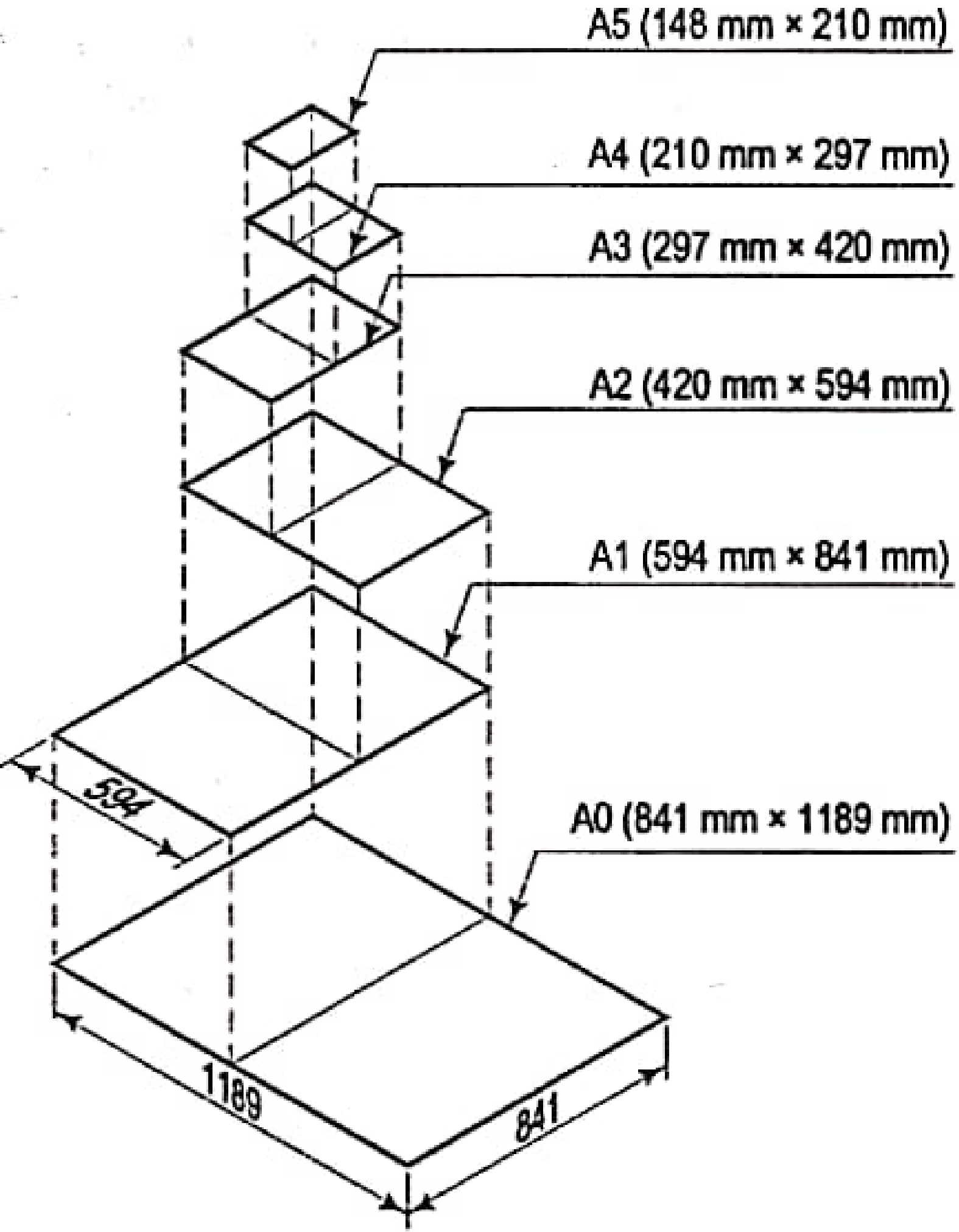
A5 (148 mm × 210 mm)
A4 (210 mm × 297 mm)
A3 (297 mm × 420 mm)
A2 (420 mm × 594 mm)
A1 (594 mm × 841 mm)
A0 (841 mm × 1189 mm)
594
1189
841